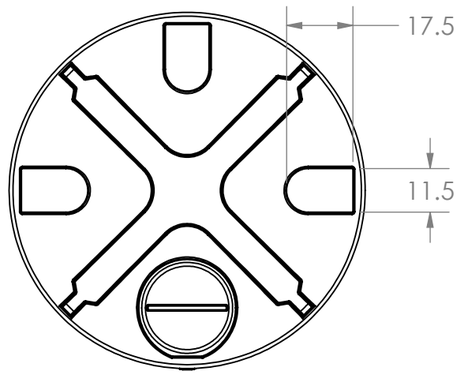

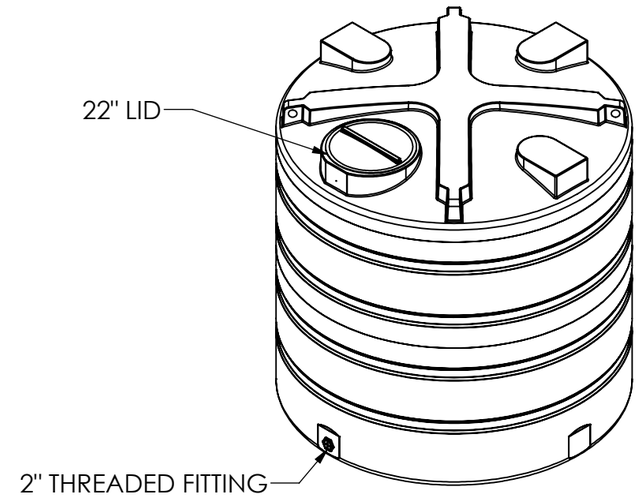

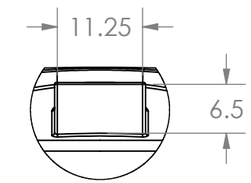

DETAIL B
SCALE 1 : 20

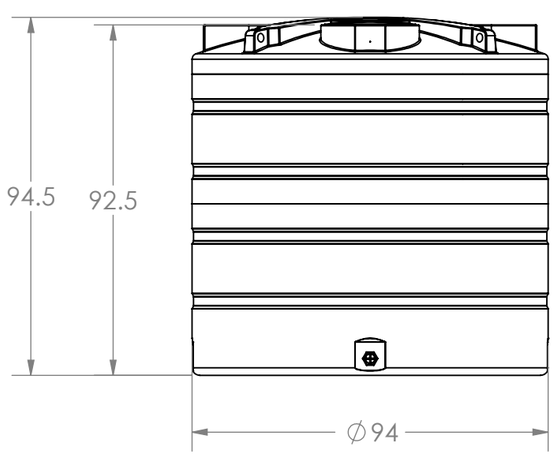

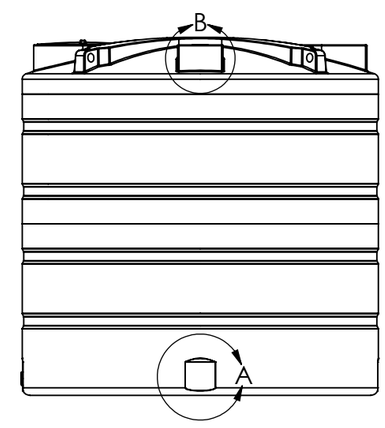

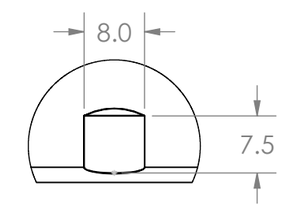

DETAIL A
SCALE 1 : 20

FITTING FLAT @ 0°, 90°, 180°, AND 270°

NON-CONTROLLED COPY
INFORMATION SUBJECT TO CHANGE WITHOUT NOTICE

MATERIAL:	INCH or INCH [mm]	THIRD ANGLE PROJECTION	TITLE: 2,500 GALLON VERTICAL STORAGE TANK
REVISION NOTES:	TOLERANCES UNLESS OTHERWISE SPECIFIED: LINEAR ±0.030 IN/IN FLATNESS ±0.100 IN/IN NOMINAL WALL THICKNESS ±20%		PART NUMBER: 40-HIV-25XX
REV BY: / DATE:	**NOTE:** DUE TO PROCESS VARIABILITY, DIMENSIONS MAY VARY.		DRAWN BY: MallinB / DATE: 3/18/26 / WEIGHT (lb/kg): / / SHEET: 1/1
			REV: A / SCALE: 1:40 / SIZE: B

PROPRIETARY AND CONFIDENTIAL: THE INFORMATION CONTAINED IN THIS DRAWING IS THE SOLE PROPERTY OF HIVE PLASTICS, LLC. ANY REPRODUCTION IN PART OR AS A WHOLE WITHOUT THE WRITTEN PERMISSION OF HIVE PLASTICS, LLC IS PROHIBITED.